FAA FORM 8130-6, APPLICATION FOR U.S. AIRWORTHINESS CERTIFICATE

Form Approved O.M.B. No. 2120-0018
12/31/2010

U.S. Department of Transportation
Federal Aviation Administration

APPLICATION FOR U.S. AIRWORTHINESS CERTIFICATE

INSTRUCTIONS - Print or type. Do not write in shaded areas; these are for FAA use only. Submit original only to an authorized FAA Representative. If additional space is required, use attachment. For special flight permits complete Sections II, VI and VII as applicable.

I. AIRCRAFT DESIGNATION

1. REGISTRATION MARK	2. AIRCRAFT BUILDER'S NAME (Make)	3. AIRCRAFT MODEL DESIGNATION	4. YR. MFR.	FAA CODING
N313P	Richard E. Griff	RV-7A	2006	
5. AIRCRAFT SERIAL NO.	**6. ENGINE BUILDER'S NAME (Make)**	**7. ENGINE MODEL DESIGNATION**		
70837	Teledyne Mattituck	TMX IO-360		
8. NUMBER OF ENGINES	**9. PROPELLER BUILDER'S NAME (Make)**	**10. PROPELLER MODEL DESIGNATION**	**11. AIRCRAFT IS (Check if applicable)**	
1	Hartzell	C2YR-1BF/F7496	☐ IMPORT	

II. CERTIFICATION REQUESTED

APPLICATION IS HEREBY MADE FOR: (Check applicable items)

A	1		STANDARD AIRWORTHINESS CERTIFICATE (Indicate Category)		NORMAL		UTILITY		ACROBATIC		TRANSPORT		COMMUTER		BALLOON		OTHER			
B		✓	SPECIAL AIRWORTHINESS CERTIFICATE (Check appropriate items)																	
	7		PRIMARY																	
	9		LIGHT-SPORT (Indicate Class)		AIRPLANE		POWER-PARACHUTE		WEIGHT-SHIFT-CONTROL		GLIDER		LIGHTER THAN AIR							
	2		LIMITED																	
	5		PROVISIONAL (Indicate Class)	1		CLASS I														
				2		CLASS II														
	3		RESTRICTED (Indicate operation(s) to be conducted)	1		AGRICULTURE AND PEST CONTROL		2		AERIAL SURVEY		3		AERIAL ADVERTISING						
				4		FOREST (Wildlife Conservation)		5		PATROLLING		6		WEATHER CONTROL						
				0		OTHER (Specify)														
	4	✓	EXPERIMENTAL (Indicate operation(s) to be conducted)	1		RESEARCH AND DEVELOPMENT		2	✓	AMATEUR BUILT		3		EXHIBITION						
				4		AIR RACING		5		CREW TRAINING		6		MARKET SURVEY						
				0		TO SHOW COMPLIANCE WITH THE CFR		7		OPERATING (Primary Category) KIT BUILT AIRCRAFT										
				8		OPERATING LIGHT-SPORT	8A		Existing Aircraft without an airworthiness certificate & do not meet § 103.1											
							8B		Operating Light-Sport Kit-Built											
							8C		Operating light-sport previously issued special light-sport category airworthiness certificate under § 21.190											
	8		SPECIAL FLIGHT PERMIT (Indicate operation(s) to be conducted, then complete Section VI or VII as applicable on reverse side)	1		FERRY FLIGHT FOR REPAIRS, ALTERATIONS, MAINTENANCE, OR STORAGE														
				2		EVACUATION FROM AREA OF IMPENDING DANGER														
				3		OPERATION IN EXCESS OF MAXIMUM CERTIFICATED TAKE-OFF WEIGHT														
				4		DELIVERING OR EXPORTING		5		PRODUCTION FLIGHT TESTING										
				6		CUSTOMER DEMONSTRATION FLIGHTS														
C	6		MULTIPLE AIRWORTHINESS CERTIFICATE (check ABOVE "Restricted Operation" and "Standard" or "Limited" as applicable)																	

III. OWNER'S CERTIFICATION

A. REGISTERED OWNER (As shown on certificate of aircraft registration) — IF DEALER, CHECK HERE →

NAME: Gary & Marilyn Matusch

ADDRESS: 14019 SE 35th Loop, Vancouver, WA 98683

B. AIRCRAFT CERTIFICATION BASIS (Check applicable blocks and complete items as indicated)

☐ AIRCRAFT SPECIFICATION OR TYPE CERTIFICATE DATA SHEET (Give No. and Revision No.)

☐ AIRWORTHINESS DIRECTIVES (Check if all applicable AD's are complied with and give the number of the last AD SUPPLEMENT available in the biweekly series as of the date of application): 2005-14-12

☐ AIRCRAFT LISTING (Give page number(s))

☐ SUPPLEMENTAL TYPE CERTIFICATE (List number of each STC incorporated)

C. AIRCRAFT OPERATION AND MAINTENANCE RECORDS

✓ CHECK IF RECORDS IN COMPLIANCE WITH 14 CFR Section 91.417

TOTAL AIRFRAME HOURS: 94.9

3 EXPERIMENTAL ONLY (Enter hours flown since last certificate issued or renewed): 94.9

D. CERTIFICATION - I hereby certify that I am the registered owner (or his agent) of the aircraft described above, that the aircraft is registered with the Federal Aviation Administration in accordance with Title 49 of the United States Code 44101 et seq. and applicable Federal Aviation Regulations, and that the aircraft has been inspected and is airworthy and eligible for the airworthiness certificate requested.

DATE OF APPLICATION	NAME AND TITLE (Print or type)	SIGNATURE
7/20/2010	Agent for ~~Gary & Marilyn Matusch~~ Marvin Ringen	Marvin Ringen

IV. INSPECTION AGENCY VERIFICATION

A. THE AIRCRAFT DESCRIBED ABOVE HAS BEEN INSPECTED AND FOUND AIRWORTHY BY: (Complete the section only if 14 CFR part 21.183(d) applies.

2		14 CFR part 121 CERTIFICATE HOLDER (Give Certificate No.)	3 ✓	CERTIFICATED MECHANIC (Give Certificate No.) Marvin Ringen A&P 3048589	6		CERTIFICATED REPAIR STATION (Give Certificate No.)
5		AIRCRAFT MANUFACTURER (Give name or firm)					

DATE	TITLE	SIGNATURE
7/20/2010	A & P	

V. FAA REPRESENTATIVE CERTIFICATION

(Check ALL applicable block items A and B)

A. I find that the aircraft described in Section I or VII meets requirements for THE CERTIFICATE REQUESTED

4 ✓ AMENDMENT OR MODIFICATION OF CURRENT AIRWORTHINESS CERTIFICATE

B. Inspection for a special permit under Section VII was conducted by: ☐ FAA INSPECTOR ☐ CERTIFICATE HOLDER UNDER ☐ FAA DESIGNEE ☐ 14 CFR part 65 ☐ 14 CFR part 121 OR 135 ☐ 14 CFR part 145

DATE	MIDO/FSDO Office		DESIGNEE'S SIGNATURE AND NO.		FAA INSPECTOR'S SIGNATURE
07/20/2010	NM-FSDO-09	4	N/A	1	Keith Ruconich

VI. PRODUCTION FLIGHT TESTING

A. MANUFACTURER

NAME	ADDRESS

B. PRODUCTION BASIS *(Check applicable item)*

- [ ] PRODUCTION CERTIFICATE *(Give production certificate number)* →
- [ ] TYPE CERTIFICATE ONLY
- [ ] APPROVED PRODUCTION INSPECTION SYSTEM

C. GIVE QUANTITY OF CERTIFICATES REQUIRED FOR OPERATING NEEDS

DATE OF APPLICATION	NAME AND TITLE *(Print or Type)*	SIGNATURE

VII. SPECIAL FLIGHT PERMIT PURPOSES OTHER THAN PRODUCTION FLIGHT TEST

A. DESCRIPTION OF AIRCRAFT

REGISTERED OWNER	ADDRESS
BUILDER *(Make)*	MODEL
SERIAL NUMBER	REGISTRATION MARK

B. DESCRIPTION OF FLIGHT — CUSTOMER DEMONSTRATION FLIGHTS [ ] *(Check if applicable)*

FROM	TO	
VIA	DEPARTURE DATE	DURATION

C. CREW REQUIRED TO OPERATE THE AIRCRAFT AND ITS EQUIPMENT

- [ ] PILOT
- [ ] CO-PILOT
- [ ] FLIGHT ENGINEER
- [ ] OTHER *(Specify)*

D. THE AIRCRAFT DOES NOT MEET THE APPLICABLE AIRWORTHINESS REQUIREMENTS AS FOLLOWS:

E. THE FOLLOWING RESTRICTIONS ARE CONSIDERED NECESSARY FOR SAFE OPERATION: *(Use attachment if necessary)*

F. CERTIFICATION – I hereby certify that I am the registered owner (or his agent) of the aircraft described above; that the aircraft is registered with the Federal Aviation Administration in accordance with Title 49 of the United States Code 44101 et seq. and applicable Federal Aviation Regulations; and that the aircraft has been inspected and is safe for the flight described.

DATE	NAME AND TITLE *(Print or Type)*	SIGNATURE

VIII. AIRWORTHINESS DOCUMENTATION (FAA/DESIGNEE use only)

	A. Operating Limitations and Markings in Compliance with 14 CFR Section 91.9, as applicable.		G. Statement of Conformity, FAA Form 8130-9 *(Attach when required)*
X	B. Current Operating Limitations Attached		H. Foreign Airworthiness Certification for Import Aircraft *(Attach when required)*
	C. Data, Drawings, Photographs, etc. *(Attach when required)*	X	I. Previous Airworthiness Certificate Issued in Accordance with 14 CFR Section 21.191(g CAR ____ (Original Attached)
	D. Current Weight and Balance information Available in Aircraft		
	E. Major Repair and Alteration, FAA Form 337 *(Attach when required)*	X	J. Current Airworthiness Certificate Issued in Accordance with 14 CFR Section 21.191(g) *(Copy Attached)*
	F. This inspection Recorded in Aircraft Records		K. Light-Sport Aircraft Statement of Compliance, FAA Form 8130-15 *(Attach when required)*

N313P, Griff, Richard E, RV-7A, S/N 70837

UNITED STATES OF AMERICA
DEPARTMENT OF TRANSPORTATION - FEDERAL AVIATION ADMINISTRATION

SPECIAL AIRWORTHINESS CERTIFICATE

A	CATEGORY/DESIGNATION	EXPERIMENTAL	
	PURPOSE	OPERATING AMATEUR BUILT AIRCRAFT	
B	MANU-FACTURER	NAME	N/A
		ADDRESS	N/A
C	FLIGHT	FROM	N/A
		TO	N/A
D	N- 313P		SERIAL NO. 70837
	BUILDER RICHARD E. GRIFF		MODEL RV-7A
E	DATE OF ISSUANCE A 07/20/2010		EXPIRY UNLIMITED
	OPERATING LIMITATIONS DATED 07/20/2010 ARE PART OF THIS CERTIFICATE		
	SIGNATURE OF FAA REPRESENTATIVE KEITH RUCONICH		DESIGNATION OR OFFICE NO. NM-FSDO-09

Any alteration, reproduction or misuse of this certificate may be punishable by a fine not exceeding $1,000 or imprisonment not exceeding 3 years, or both. THIS CERTIFICATE MUST BE DISPLAYED IN THE AIRCRAFT IN ACCORDANCE WITH APPLICABLE TITLE 14, CODE OF FEDERAL REGULATIONS (CFR).

FAA FORM 8130-7 (07/04) *SEE REVERSE SIDE* *NSN: 0052-00-693-4000*

U.S. Department of Transportation
Federal Aviation Administration

Northwest Mountain Region
Colorado, Idaho, Montana, Oregon, Utah, Washington, Wyoming

Flight Standards District Office
3180 NW 229th Ave
Hillsboro, Oregon 97124
503-615-3232, Fax: 503-615-3300
800-847-3806 ext. 3232

EXPERIMENTAL OPERATING LIMITATIONS

Operating Amateur-Built Aircraft

(These limitations are derived from the national standards contained in FAA Order 8130.2F, chg. 5, 01/15/2010)

REG. NO.	MAKE:	MODEL:	SERIAL NO:
N313P	Richard E. Griff	RV-7A	70837

THESE OPERATING LIMITATIONS ARE PART OF THE SPECIAL AIRWORTHINESS CERTIFICATE AND MUST BE ACCESSIBLE TO THE PILOT

1. No person may operate this aircraft for other than the purpose of meeting the requirements of § 91.319(b) during phase I flight testing, and for recreation and education after meeting these requirements as stated in the program letter (required by § 21.193) for this aircraft. In addition, this aircraft must be operated in accordance with applicable air traffic and general operating rules of part 91 and all additional limitations herein prescribed under the provisions of § 91.319(i). These operating limitations are a part of Form 8130-7, and are to be carried in the aircraft at all times and be available to the pilot in command of the aircraft.

2. During phase I flight testing to meet the requirements of § 91.319(b), all flights must be conducted within the geographical area described as follows: **Within 50 NM radius of Troutdale Airport (TTD), Troutdale, OR.**

3. This aircraft must be operated for at least 40 hours in the assigned geographic area. (Phase I)

4. All test flights, at a minimum, must be conducted under day VFR only. Guidance concerning the scope and detail of test flights can be found in AC 90-89. Following satisfactory completion of the required number of flight hours in the flight test area, the pilot must certify in the records that the aircraft has been shown to comply with § 91.319(b). Compliance with § 91.319(b) must be recorded in the aircraft records with the following, or a similarly worded, statement: **"I certify that the prescribed flight test hours have been completed and the aircraft is controllable throughout its normal range of speeds and throughout all maneuvers to be executed, has no hazardous operating characteristics or design features, and is safe for operation. The following aircraft operating data has been demonstrated during the flight testing: speeds Vso _____, Vx _____, and Vy _____, and the weight _____ and CG location _____ at which they were obtained."**

5. Except for takeoffs and landings, this aircraft may not be operated over densely populated areas or in congested airways.

6. This aircraft is prohibited from operating in congested airways or over densely populated areas unless directed by air traffic control, or unless sufficient altitude is maintained to effect a safe emergency landing in the event of a power unit failure, without hazard to persons or property on the ground.

7. This aircraft is to be operated under VFR, day only. (Phase 1)

8. After completion of phase I flight testing, unless appropriately equipped for night and/or instrument flight in accordance with § 91.205, this aircraft is to be operated under VFR, day only.

9. Aircraft instruments and equipment installed and used under § 91.205 must be inspected and maintained in accordance with the requirements of Part 91. Any maintenance or inspection of this equipment must be recorded in the aircraft logbook and maintenance records.

10. During the flight testing phase, no person may be carried in this aircraft during flight unless that person is essential to the purpose of the flight.

11. No person may operate this aircraft for carrying persons or property for compensation or hire.

12. The pilot in command of this aircraft must advise each passenger of the experimental nature of this aircraft, and explain that it does not meet the certification requirements of a standard certificated aircraft.

13. This aircraft must contain the placards or markings, as required by § 91.9. In addition, the placards and markings must be inspected for legibility and clarity, and the associated systems inspected for easy access and operation, to ensure they function as intended by the amateur builder/owner during each condition inspection.

14. This aircraft must display the word "EXPERIMENTAL" in accordance with § 45.23(b).

15. This aircraft is prohibited from aerobatic flight, that is, an intentional maneuver involving an abrupt change in the aircraft's attitude, an abnormal attitude, or abnormal acceleration not necessary for normal flight.

16. This aircraft may conduct aerobatic flight in accordance with the provisions of § 91.303. Aerobatics must not be attempted until sufficient flight experience has been gained to establish that the aircraft is satisfactorily controllable and in compliance with § 91.319(b). The aircraft may only conduct those aerobatic flight maneuvers that have been satisfactorily accomplished during flight testing and recorded in the aircraft logbook and maintenance records by use of the following, or a similarly worded, statement: **"I certify that the following aerobatic maneuvers have been test flown and that the aircraft is controllable throughout the maneuvers' normal range of speeds, and is safe for operation. The flight-tested aerobatic maneuvers are _____, _____, _____, and _____."**

17. The pilot in command of this aircraft must hold a pilot certificate or an authorized instructor's logbook endorsement. The pilot in command also must meet the requirements of § 61.31(e), (f), (g), (h), (i), and (j), as appropriate.

18. After incorporating a major change as described in § 21.93, the aircraft owner is required to reestablish compliance with § 91.319(b) **and notify the geographically responsible FSDO of the location of the proposed test area. The aircraft owner must obtain concurrence from the FSDO as to the suitability of the proposed test area.** If the major change includes installing a different type of engine (reciprocating to turbine) or a change of a fixed-pitch from or to a controllable propeller, the aircraft owner must fill out a revised Form 8130-6 to update the aircraft's file in the FAA Aircraft Registration Branch. All operations must be conducted under day VFR conditions in a sparsely populated area. The aircraft must remain in flight test for a minimum of 5 hours. The FSDO may require additional time (more than 5 hours) depending on the extent of the modification. Persons nonessential to the flight must not be carried. The aircraft owner must make a detailed aircraft logbook and maintenance records entry describing the change before the test flight. Following satisfactory completion of the required number of flight hours in the flight test area, the pilot must certify in the records that the aircraft has been shown to comply with § 91.319(b). Compliance with § 91.319(b) must be recorded in the aircraft records with the following, or a similarly worded, statement: **"I certify that the prescribed flight test hours have been completed and the aircraft is controllable throughout its normal range of speeds and throughout all maneuvers to be executed, has no hazardous characteristics or design features, and is safe for operation. The following aircraft operating data has been demonstrated during the flight testing: speeds Vso _____, Vx _____, and Vy _____, and the weight _____, and CG location _____ at which they were obtained."**

19. This aircraft must not be used for glider towing, banner towing, or intentional parachute jumping.

20. This aircraft does not meet the requirements of the applicable, comprehensive, and detailed airworthiness code, as provided by Annex 8 to the Convention on International Civil Aviation. The owner/operator of this aircraft must obtain written permission from another CAA before operating this aircraft in or over that country. That written permission must be carried aboard the aircraft together with the U.S. airworthiness certificate and, upon request, be made available to an FAA inspector or the CAA in the country of operation.

REG. NO.	MAKE:	MODEL:	SERIAL NO:
N313P	Richard E Griff	RV-7A	70837

21. No person must operate this aircraft unless within the preceding 12 calendar months it has had a condition inspection performed in accordance with the scope and detail of appendix D to part 43, or other FAA-approved programs, and was found to be in a condition for safe operation. As part of the condition inspection, cockpit instruments must be appropriately marked and needed placards installed in accordance with § 91.9. In addition, system-essential controls must be in good condition, securely mounted, clearly marked, and provide for ease of operation. This inspection will be recorded in the aircraft logbook and maintenance records.

22. Condition inspections must be recorded in the aircraft logbook and maintenance records showing the following, or a similarly worded, statement: **"I certify that this aircraft has been inspected on [insert date] in accordance with the scope and detail of appendix D to part 43, and was found to be in a condition for safe operation."** The entry will include the aircraft's total time-in-service (cycles if appropriate), and the name, signature, certificate number, and type of certificate held by the person performing the inspection.

23. An experimental aircraft builder certificated as a repairman for this aircraft under § 65.104 or an appropriately rated FAA-certificated mechanic may perform the condition inspection required by these operating limitations.

24. Application must be made to the geographically responsible FSDO or MIDO for any revision to these operating limitations.

25. The pilot in command of this aircraft must notify air traffic control of the experimental nature of this aircraft when operating into or out of airports with an operational control tower. When filing IFR, the experimental nature of this aircraft must be listed in the remarks section of the flight plan.

Keith Ruconich

Keith Ruconich
Aviation Safety Inpsector

July 20, 2010

REG. NO.	MAKE:	MODEL:	SERIAL NO:
N313P	Richard E. Griff	RV-7A	70837

From: Marv Ringen (marvringen@comcast.net)
To: mamatusch@yahoo.com;
Date: Fri, July 9, 2010 1:45:32 PM
Cc:
Subject: Lost Airworthiness Cert.doc

July 9, 2010

Gary & Marilyn Matusch
14019 SE 35th Loop
Vancouver, WA 98683

Dear Sir:

My Wife and I (Gary & Marilyn Matusch) are the registered owners of aircraft N313P. This aircraft is a RV-7A, manufactured on 10/18/06, s/n 70837. The reason we are contacting you is. We need your assistance in obtaining a replacement Airworthiness Certificate. Our current Airworthiness Certificate has been lost. Hopefully you will be able to assist us with our request.

Thank you,

Gary & Marilyn Matusch

Marilyn Matusch

Gary Matusch

Notary Public
State of Washington
SUSAN E SWEARINGIN
My Appointment Expires Mar 11, 2013

FAA FORM 8130-6, APPLICATION FOR U.S. AIRWORTHINESS CERTIFICATE

Form Approved O.M.B. No. 2120-0018
09/30/2007

U.S. Department of Transportation
Federal Aviation Administration

APPLICATION FOR U.S. AIRWORTHINESS CERTIFICATE

INSTRUCTIONS - Print or type. Do not write in shaded areas; these are for FAA use only. Submit original only to an authorized FAA Representative. If additional space is required, use attachment. For special flight permits complete Sections II, VI and VII as applicable.

I. AIRCRAFT DESIGNATION

1. REGISTRATION MARK	2. AIRCRAFT BUILDER'S NAME (Make)	3. AIRCRAFT MODEL DESIGNATION	4. YR. MFR.	FAA CODING
N313P	Richard E. Griff	RV-7A	2006	Ø5619YØ
5. AIRCRAFT SERIAL NO.	**6. ENGINE BUILDER'S NAME (Make)**	**7. ENGINE MODEL DESIGNATION**		59602
70837	Teledyne Mattituck	TMX IO-360		
8. NUMBER OF ENGINES	**9. PROPELLER BUILDER'S NAME (Make)**	**10. PROPELLER MODEL DESIGNATION**	**11. AIRCRAFT IS (Check if applicable)**	
1	Hartzell	C2YR-1BF/F7496	IMPORT	

II. CERTIFICATION REQUESTED

APPLICATION IS HEREBY MADE FOR: (Check applicable items)

A	1		STANDARD AIRWORTHINESS CERTIFICATE (Indicate Category)		NORMAL		UTILITY		ACROBATIC		TRANSPORT		COMMUTER		BALLOON		OTHER		
B		✓	SPECIAL AIRWORTHINESS CERTIFICATE (Check appropriate items)																
	7		PRIMARY																
	9		LIGHT-SPORT (Indicate Class)		AIRPLANE		POWER-PARACHUTE		WEIGHT-SHIFT-CONTROL		GLIDER		LIGHTER THAN AIR						
	2		LIMITED																
	5		PROVISIONAL (Indicate Class)	1	CLASS I														
				2	CLASS II														
	3		RESTRICTED (Indicate operation(s) to be conducted)	1	AGRICULTURE AND PEST CONTROL			2	AERIAL SURVEY			3	AERIAL ADVERTISING						
				4	FOREST (Wildlife Conservation)			5	PATROLLING			6	WEATHER CONTROL						
				0	OTHER (Specify)														
	4	✓	EXPERIMENTAL (Indicate operation(s) to be conducted)	1	RESEARCH AND DEVELOPMENT			2	✓	AMATEUR BUILT		3	EXHIBITION						
				4	AIR RACING			5		CREW TRAINING		6	MARKET SURVEY						
				0	TO SHOW COMPLIANCE WITH THE CFR			7		OPERATING (Primary Category) KIT BUILT AIRCRAFT									
				8	OPERATING LIGHT-SPORT	8A		Existing Aircraft without an airworthiness certificate & do not meet § 103.1											
						8B		Operating Light-Sport Kit-Built											
						8C		Operating light-sport previously issued special light-sport category airworthiness certificate under § 21.190											
	8		SPECIAL FLIGHT PERMIT (Indicate operation(s) to be conducted, then complete Section VI or VII as applicable on reverse side)	1	FERRY FLIGHT FOR REPAIRS, ALTERATIONS, MAINTENANCE, OR STORAGE														
				2	EVACUATION FROM AREA OF IMPENDING DANGER														
				3	OPERATION IN EXCESS OF MAXIMUM CERTIFICATED TAKE-OFF WEIGHT														
				4	DELIVERING OR EXPORTING			5		PRODUCTION FLIGHT TESTING									
				6	CUSTOMER DEMONSTRATION FLIGHTS														
C	6		MULTIPLE AIRWORTHINESS CERTIFICATE (check ABOVE "Restricted Operation" and "Standard" or "Limited" as applicable)																

III. OWNER'S CERTIFICATION

A. REGISTERED OWNER (As shown on certificate of aircraft registration) — IF DEALER, CHECK HERE →

NAME	ADDRESS
Richard E Griff	2354 E 2900 N Twin Falls, ID ~~83201~~ 83301

B. AIRCRAFT CERTIFICATION BASIS (Check applicable blocks and complete items as indicated)

AIRCRAFT SPECIFICATION OR TYPE CERTIFICATE DATA SHEET (Give No. and Revision No.)	N/A	X	AIRWORTHINESS DIRECTIVES (Check if all applicable AD's are compiled with and give the number of the last AD SUPPLEMENT available in the biweekly series as of the date of application) 2005-14-12
AIRCRAFT LISTING (Give page number(s))	N/A		SUPPLEMENTAL TYPE CERTIFICATE (List number of each STC incorporated) N/A

C. AIRCRAFT OPERATION AND MAINTENANCE RECORDS

✓	CHECK IF RECORDS IN COMPLIANCE WITH 14 CFR Section 91.417	TOTAL AIRFRAME HOURS 0	3 EXPERIMENTAL ONLY (Enter hours flown since last certificate issued or renewed) 0

D. CERTIFICATION - I hereby certify that I am the registered owner (or his agent) of the aircraft described above, that the aircraft is registered with the Federal Aviation Administration in accordance with Title 49 of the United States Code 44101 et seq. and applicable Federal Aviation Regulations, and that the aircraft has been inspected and is airworthy and eligible for the airworthiness certificate requested.

DATE OF APPLICATION	NAME AND TITLE (Print or type)	SIGNATURE
October 10, 2006	Richard E Griff	Richard E Griff

IV. INSPECTION AGENCY VERIFICATION

A. THE AIRCRAFT DESCRIBED ABOVE HAS BEEN INSPECTED AND FOUND AIRWORTHY BY: (Complete the section only if 14 CFR part 21.183(d) applies.

2	14 CFR part 121 CERTIFICATE HOLDER (Give Certificate No.)	3	CERTIFICATED MECHANIC (Give Certificate No.)	6	CERTIFICATED REPAIR STATION (Give Certificate No.)
5	AIRCRAFT MANUFACTURER (Give name or firm)				

DATE	TITLE	SIGNATURE

V. FAA REPRESENTATIVE CERTIFICATION

(Check ALL applicable block items A and B)

A. I find that the aircraft described in Section I or VII meets requirements for: [X] THE CERTIFICATE REQUESTED; [4] AMENDMENT OR MODIFICATION OF CURRENT AIRWORTHINESS CERTIFICATE

B. Inspection for a special permit under Section VII was conducted by: [ ] FAA INSPECTOR; [X] FAA DESIGNEE; [ ] CERTIFICATE HOLDER UNDER; [ ] 14 CFR part 65; [ ] 14 CFR part 121 OR 135; [ ] 14 CFR part 145

DATE	DISTRICT OFFICE		DESIGNEE'S SIGNATURE AND NO.	FAA INSPECTOR'S SIGNATURE
10/18/06		4	DART-830719NM Leo Wadekamper LEO WADEKAMPER	

VI. PRODUCTION FLIGHT TESTING

A. MANUFACTURER

NAME	ADDRESS

B. PRODUCTION BASIS *(Check applicable item)*

- [ ] PRODUCTION CERTIFICATE *(Give production certificate number)* →
- [ ] TYPE CERTIFICATE ONLY
- [ ] APPROVED PRODUCTION INSPECTION SYSTEM

C. GIVE QUANTITY OF CERTIFICATES REQUIRED FOR OPERATING NEEDS

DATE OF APPLICATION	NAME AND TITLE *(Print or Type)*	SIGNATURE

VII. SPECIAL FLIGHT PERMIT PURPOSES OTHER THAN PRODUCTION FLIGHT TEST

A. DESCRIPTION OF AIRCRAFT

REGISTERED OWNER	ADDRESS
BUILDER *(Make)*	MODEL
SERIAL NUMBER	REGISTRATION MARK

B. DESCRIPTION OF FLIGHT — CUSTOMER DEMONSTRATION FLIGHTS ☐ *(Check if applicable)*

FROM	TO	
VIA	DEPARTURE DATE	DURATION

C. CREW REQUIRED TO OPERATE THE AIRCRAFT AND ITS EQUIPMENT

- [ ] PILOT
- [ ] CO-PILOT
- [ ] FLIGHT ENGINEER
- [ ] OTHER *(Specify)*

D. THE AIRCRAFT DOES NOT MEET THE APPLICABLE AIRWORTHINESS REQUIREMENTS AS FOLLOWS:

E. THE FOLLOWING RESTRICTIONS ARE CONSIDERED NECESSARY FOR SAFE OPERATION: *(Use attachment if necessary)*

F. CERTIFICATION – I hereby certify that I am the registered owner (or his agent) of the aircraft described above; that the aircraft is registered with the Federal Aviation Administration in accordance with Title 49 of the United States Code 44101 et seq. and applicable Federal Aviation Regulations; and that the aircraft has been inspected and is safe for the flight described.

DATE	NAME AND TITLE *(Print or Type)*	SIGNATURE

VIII. AIRWORTHINESS DOCUMENTATION (FAA/DESIGNEE use only)

X	A. Operating Limitations and Markings in Compliance with 14 CFR Section 91.9, as applicable.		G. Statement of Conformity, FAA Form 8130-9 *(Attach when required)*
X	B. Current Operating Limitations Attached		H. Foreign Airworthiness Certification for Import Aircraft *(Attach when required)*
X	C. Data, Drawings, Photographs, etc. *(Attach when required)*		I. Previous Airworthiness Certificate Issued in Accordance with 14 CFR Section _____ CAR _____ (Original Attached)
X	D. Current Weight and Balance information Available in Aircraft		
	E. Major Repair and Alteration, FAA Form 337 *(Attach when required)*	X	J. Current Airworthiness Certificate Issued in Accordance with 14 CFR Section 21.191(g) (Copy Attached) (1)
X	F. This inspection Recorded in Aircraft Records		K. Light-Sport Aircraft Statement of Compliance, FAA Form 8130-15 *(Attach when required)*

UNITED STATES OF AMERICA
DEPARTMENT OF TRANSPORTATION—FEDERAL AVIATION ADMINISTRATION

SPECIAL AIRWORTHINESS CERTIFICATE

A	CATEGORY/DESIGNATION	EXPERIMENTAL	
	PURPOSE	OPERATING AMATEUR BUILT AIRCRAFT	
B	MANU-FACTURER	NAME	N/A
		ADDRESS	N/A
C	FLIGHT	FROM	N/A
		TO	N/A
D	N— 313P		SERIAL NO. 70837
	BUILDER RICHARD GRIFF		MODEL RV 7A
E	DATE OF ISSUANCE 10-18-2006		EXPIRY UNLIMITED
	OPERATING LIMITATIONS DATED 10-18-2006 ARE A PART OF THIS CERTIFICATE		
	SIGNATURE OF FAA REPRESENTATIVE LEO WADEKAMPER		DESIGNATION OR OFFICE NO. DART 830719 NM

Any alteration, reproduction or misuse of this certificate may be punishable by a fine not exceeding $1,000 or imprisonment not exceeding 3 years, or both. THIS CERTIFICATE MUST BE DISPLAYED IN THE AIRCRAFT IN ACCORDANCE WITH APPLICABLE FEDERAL AVIATION REGULATIONS.

FAA FORM 8130-7 (10/82)

SEE REVERSE SIDE

A	This airworthiness certificate is issued under the authority of the Federal Aviation Act of 1958 and the Federal Aviation Regulations (FAR).
B	This airworthiness certificate authorizes the manufacturer named on the reverse side to conduct production flight tests, and only production flight tests, of aircraft registered in his name. No person may conduct production flight tests under this certificate: (1) Carrying persons or property for compensation or hire; and/or (2) Carrying persons not essential to the purpose of the flight.
C	This airworthiness certificate authorizes the flight specified on the reverse side for the purpose shown in Block A.
D	This airworthiness certificate certifies that, as of the date of issuance, the aircraft to which issued has been inspected and found to meet the requirements of the applicable FAR. The aircraft does not meet the requirements of the applicable comprehensive and detailed airworthiness code as provided by Annex 8 to the Convention On International Civil Aviation. No person may operate the aircraft described on the reverse side: (1) except in accordance with the applicable FAR and in accordance with conditions and limitations which may be prescribed by the Administrator as part of this certificate; (2) over any foreign country without the special permission of that country.
E	Unless sooner surrendered, suspended, or revoked, this airworthiness certificate is effective for the duration and under the conditions prescribed in FAR Part 21, Section 21.181 or 21.217.

EXPERIMENTAL OPERATING LIMITATIONS
Operating Amateur-Built Aircraft
Phase 1
Operations in the Assigned Flight Test Area

REG. NO.	MAKE:	MODEL:	SERIAL NO:
N313P	Richard Griff	RV 7A	70837

NOTE: No person may operate outside the assigned flight test area prior to the completion of phase 1 flight testing. This includes the entry in the aircraft maintenance records as required by limitation #4.

1. No person may operate this aircraft for other than the purpose of meeting the requirements of 14 CFR §91.319(b) during phase 1 flight testing, and for recreation and education after meeting these requirements as stated in the program letter dated 10-18-2006 for this aircraft. In addition, this aircraft must be operated in accordance with applicable air traffic and general operating rules of Part 91 and all additional limitations herein prescribed under the provisions of §91.319(i). These operating limitations are a part of Form 8130-7, and are to be carried in the aircraft at all times and be available to the pilot in command of the aircraft.
2. During phase 1 flight testing to meet the requirements of §91.319(b) all flights shall be conducted within the geographical area described as follows:
   a. The area must be described by radius, coordinates, and/or landmarks.
   b. The designated area must be over open water or sparsely populated areas having light air traffic.
   c. The size of the area must be that required to safely conduct the type of anticipated maneuvers and tests, as appropriate.
3. This aircraft must be operated for at least 40 hours in the assigned geographic area.
4. All test flights, as a minimum, must be conducted under VFR, day only. Guidance concerning the scope and detail of test flights can be found in AC 90-89. Following satisfactory completion of the required number of flight hours in the flight test area, the pilot must certify in the records that the aircraft has been shown to comply with §91.319(b). Compliance with §91.319(b) must be recorded in the aircraft records with the following or a similarly worded statement: **" I certify that the prescribed flight test hours have been completed and the aircraft is controllable throughout its normal range of speeds and throughout all maneuvers to be executed, has no hazardous operating characteristics or design features, and is safe for operation. The following aircraft operating data has been demonstrated during the flight testing: speeds Vso_____, Vx_____, and Vy_____, and the weight _____and CG location_____ at which they were obtained".**
5. Except for takeoffs and landings, this aircraft may not be operated over densely populated areas or in congested airways.
7. This aircraft is to be operated under VFR, day only.
9. Aircraft instruments and equipment installed and used under §91.205 must be inspected and maintained in accordance with the requirements of part 91. Any maintenance or inspection of this equipment must be recorded in the aircraft maintenance records.
10. During the flight-testing phase, no person may be carried in this aircraft during flight unless that person is essential to the purpose of the flight.
11. No person may operate this aircraft for carrying persons or property for compensation or hire.
12. The pilot in command of this aircraft must advise each passenger of the experimental nature of this aircraft, and explain that it does not meet the certification requirements of a standard certificated aircraft.
13. The aircraft must contain the placards, markings, etc. as required by §91.9. In addition, the placards and markings must be inspected for legibility and clarity, and the associated systems inspected for easy access and operation, to ensure they function in accordance with the manufacturer's specifications during each condition inspection.

14. This aircraft must display the word **EXPERIMENTAL** in accordance with §45.23(b).

15. This aircraft is prohibited from aerobatic flight, that is, an intentional maneuver involving an abrupt change in the aircraft's attitude, an abnormal attitude, or abnormal acceleration not necessary for normal flight.

17. The pilot in command of this aircraft must hold an appropriate category/class rating. If required, the pilot in command also must hold a type rating in accordance with Part 61, or a letter of authorization issued by an FAA Flight Standards Operations Inspector.

18. The pilot-in-command of this aircraft must hold a pilot certificate or an authorized instructor's logbook endorsement. The pilot in command also must meet the requirements of §61.31(e), (f), (g), (h), (i) and (j) as appropriate.

19. After incorporating a major change as described in § 21.93, the aircraft owner is required to reestablish compliance with § 91.319(b) **and notify the geographically responsible FSDO of the location of the proposed test area. The aircraft owner must obtain concurrence from the FSDO as to the suitability of the proposed test area.** If the major change includes installing a different make and model of engine or propeller, the aircraft owner must fill out a revised Form 8130-6 to update the aircraft's file in the FAA Aircraft Registry. All operations must be conducted under day VFR conditions in a sparsely populated area. The aircraft must remain in flight test for a minimum of 5 hours or for the time the FSDO assigns. Persons nonessential to the flight must not be carried. The aircraft owner must make a detailed log book entry describing the change before the test flight. Following satisfactory completion of the required number of flight hours in the flight test area, the pilot must certify in the records that the aircraft has been shown to comply with § 91.319(b). Compliance with §91.319(b) must be recorded in the aircraft records with the following, or a similarly worded, statement: **"I certify that the prescribed flight test hours have been completed and the aircraft is controllable throughout its normal range of speeds and throughout all maneuvers to be executed, has no hazardous operating characteristics or design features, and is safe for operation. The following aircraft operating data has been demonstrated during the flight testing: speeds Vso_____, Vx_____, and Vy_____, and weight_____, and CG location_____ at which they were obtained."**

20. This aircraft must not be used for glider towing, banner towing, or intentional parachute jumping.

21. This aircraft does not meet the requirements of the applicable, comprehensive, and detailed airworthiness code as provided by Annex 8 to the Convention on International Civil Aviation. The owner/operator of this aircraft must obtain written permission from another CAA prior to operating this aircraft in or over that country. That written permission must be carried aboard the aircraft together with the U.S. airworthiness certificate and, upon request, be made available to an ASI or the CAA in the country of operation.

22. No person must operate this aircraft unless within the preceding 12 calendar months it has had a condition inspection performed in accordance with the scope and detail of appendix D to part 43, or other FAA approved programs, and was found to be in a condition for safe operation. As part of the condition inspection, cockpit instruments must be appropriately marked and needed placards installed in accordance with § 91.9. In addition, system-essential controls must be in good condition, securely mounted, clearly marked, and provide for ease of operation. This inspection will be recorded in the aircraft maintenance records.

23. Condition inspections must be recorded in the aircraft maintenance records showing the following, or similarly worded, statement:

    "I certify that this aircraft has been inspected on (insert date) in accordance with the scope and detail of Appendix D to Part 43 and was found to be in a condition for safe operation."

    The entry will include the aircraft's total time-in-service, and the name, signature, certificate number, and type of certificate held by the person performing the inspection.

26. An experimental aircraft builder certificated as a repairman for this aircraft under §65.104, or an appropriately rated FAA certificated mechanic may perform the condition inspection required by these operating limitations.

27. Application must be made to the geographically responsible FSDO or MIDO for any revision to these operating limitations.

28. The pilot in command of this aircraft must notify air traffic control of the experimental nature of this aircraft when operating into or out of airports with an operational control tower. When filing instrument flight rules (IFR), the experimental nature of this aircraft must be listed in the remarks section of the flight plan.

Leo V. Wadekamper
Designated Airworthiness Representative
DART 830719NM

Date issued: October 18, 2006

EXPERIMENTAL OPERATING LIMITATIONS
Operating Amateur-Built Aircraft
Phase 2
Operations Outside the Assigned Flight Test Area

REG. NO.	MAKE:	MODEL:	SERIAL NO:
N313P	Richard Griff	RV 7A	70837

NOTE: No person may operate outside the assigned flight test area prior to the completion of Phase 1 flight testing. This includes the entry in the aircraft maintenance records as required by Phase 1 limitation #4.

1. No person may operate this aircraft for other than the purpose of meeting the requirements of 14 CFR § 91.319(b) during phase 1 flight testing, and for recreation and education after meeting these requirements as stated in the program letter dated 10-18-2006 for this aircraft. In addition, this aircraft must be operated in accordance with applicable air traffic and general operating rules of Part 91 and all additional limitations herein prescribed under the provisions of § 91.319(i). These operating limitations are a part of FAA Form 8130-7, and are to be carried in the aircraft at all times and be available to the pilot in command of the aircraft.

5. Except for takeoffs and landings, this aircraft may not be operated over densely populated areas or in congested airways.

6. This aircraft is prohibited from operating in congested airways or over densely populated areas unless directed by air traffic control, or unless sufficient altitude is maintained to effect a safe emergency landing in the event of a power unit failure, without hazard to persons or property on the surface.

8. After completion of Phase 1 flight testing, unless appropriately equipped for night and/or instrument flight in accordance §91.205, this aircraft is to be operated under VFR, day only.

9. Aircraft instruments and equipment installed and used under §91.205 must be inspected and maintained in accordance with the requirements of part 91. Any maintenance or inspection of this equipment must be recorded in the aircraft maintenance records.

11. No person may operate this aircraft for carrying persons or property for compensation or hire.

12. The pilot in command of this aircraft must advise each passenger of the experimental nature of this aircraft, and explain that it does not meet the certification requirements of a standard certificated aircraft.

13. The aircraft must contain the placards, markings, etc. as required by §91.9. In addition, the placards and markings must be inspected for legibility and clarity, and the associated systems inspected for easy access and operation, to ensure they function in accordance with the manufacturer's specifications during each condition inspection.

14. This aircraft must display the word **EXPERIMENTAL** in accordance with §45.23(B).

15. This aircraft is prohibited from aerobatic flight, that is, an intentional maneuver involving an abrupt change in the aircraft's attitude, an abnormal attitude, or abnormal acceleration not necessary for normal flight.

17. The pilot in command of this aircraft must hold an appropriate category/class rating. If required, the pilot in command must also must hold a type rating in accordance with Part 61, or a letter of authorization issued by an FAA Flight Standards Operations Inspector.

18. The pilot-in-command of this aircraft must hold a pilot certificate, or an authorized instructor's logbook endorsement. The pilot-in-command also must meet the requirements of §61.31(e), (f), (g), (h), (i) and (j) as appropriate.

19. After incorporating a major change as described in 14 CFR § 21.93, the aircraft owner is required to reestablish compliance with 14 CFR § 91.319(b) **and notify the geographically responsible FSDO of the location of the proposed test area. The aircraft owner must obtain concurrence from the FSDO as to the**

suitability of the proposed test area. All operations must be conducted under day VFR conditions in a sparsely populated area. The aircraft must remain in flight test for a minimum of 5 hours or for the time the FSDO assigns. Persons nonessential to the flight must not be carried. The aircraft owner must make a detailed log book entry describing the change before the test flight. Following satisfactory completion of the required number of flight hours in the flight test area, the pilot must certify in the records that the aircraft has been shown to comply with § 91.319(b). Compliance with 14 CFR § 91.319(b) must be recorded in the aircraft records with the following, or a similarly worded, statement: **"I certify that the prescribed flight test hours have been completed and the aircraft is controllable throughout its normal range of speeds and throughout all maneuvers to be executed, has no hazardous operating characteristics or design features, and is safe for operation. The following aircraft operating data has been demonstrated during the flight testing: speeds Vso_____, Vx_____, and Vy_____, and weight_____, and CG location_____ at which they were obtained."**

20. This aircraft must not be used for glider towing, banner towing, or intentional parachute jumping.

21. This aircraft does not meet the requirements of the applicable, comprehensive, and detailed airworthiness code as provided by Annex 8 to the Convention on International Civil Aviation. The owner/operator of this aircraft must obtain written permission from another CAA prior to operating this aircraft in or over that country. That written permission must be carried aboard the aircraft together with the U.S. airworthiness certificate, and upon request, be made available to an ASI or the CAA in the country of operation.

22. No person must operate this aircraft unless within the preceding 12 calendar months it has had a condition inspection performed in accordance with the scope and detail of appendix D to part 43, or other FAA approved programs, and was found to be in a condition for safe operation. As part of the condition inspection, cockpit instruments must be appropriately marked and needed placards installed in accordance with § 91.9. In addition, system-essential controls must be in good condition, securely mounted, clearly marked, and provide for ease of operation. This inspection will be recorded in the aircraft maintenance records.

23. Condition inspections must be recorded in the aircraft maintenance records showing the following, or similarly worded, statement:

    "I certify that this aircraft has been inspected on (insert date) in accordance with the scope and detail of Appendix D of Part 43 and found to be in a condition for safe operation."

    The entry will include the aircraft's total time-in-service, and the name, signature, certificate number, and type of certificate held by the person performing the inspection.

26. An experimental aircraft builder certificated as a Repairman for this aircraft under §65.104, or an appropriately rated FAA certificated mechanic may perform the condition inspection required by these operating limitations.

27. Application must be made to the geographically responsible FSDO or MIDO for any revision to these limitations.

28. The pilot in command of this aircraft must notify air traffic control of the experimental nature of this aircraft when operating into or out of airports with an operational control tower. When filing instrument flight rules (IFR), the experimental nature of this aircraft shall be listed in the remarks section of the flight plan.

Leo V. Wadekamper
Designated Airworthiness Representative
DART 830719NM

Date issued: 10-18-2006

ACKNOWLEDGMENT OF SPECIAL OPERATING LIMITATIONS

TO WHOM IT MAY CONCERN:

I certify that I have read and understand the Special Operating Limitations which are a part of the Special Airworthiness Certificate, FAA Form 8130-7, issued 10/18/2006.

This Airworthiness Certificate is issued for aircraft make VANS **model** RV-7A, **serial number** 70837, **and registration number** N313P.

APPLICANT **DATE** 10-18-2006

Weight and Balance 9-Aug-05

Wheels only

N number	N313P
Owner	Richard Griff
Address	2354E 2900N
	Twin Falls ID 83301
	USA

Make	Van's
Model	Vans RV-7A
S\N	70837

	Max weight		1800
6 Lbs./Gal	Fuel cap.	42	252
1.87/QT	Oil cap.(qts)	8	14.96
	# pax.		2
	Baggage @	100	126.78

Aircraft configuration while being weighed

Fuel	252	Datum	70 fwd leading edge	
Oil	full	leveling	normal flight	2.15" under MAWS

	scale reading-	Tare=	adjusted weight	arm	moment
Right main scale	490	0	490	93.96	46040.4
Left main scale	485	0	485	93.96	45570.6
Tail/nose scale	371	0	371	39.11	14509.81
Oil (Subtract if necessary)					
Fuel (Subtract if necessary)			-252	80	-20160
total aircraft weight			1094		85960.81

Center of gravity 78.57478062 (moment/weight)

Forward CG limit 78.7 Aerobatic

Aft CG limit 86.82 Aerobatic **in [ ] out [X]**

	farward weight	arm	moment	Extreme Aft weight	arm	moment
Aircraft	1094	78.5747806	85960.81	1094	78.57478062	85961
pilot	170	97.48	16571.6	170	97.48	16572
Pax	0	97.48	0	170	97.48	16572
Oil	0	0	0	0	0	0
Fuel @ 6#	252	80	20160	50	80	4000
Baggage	0	126.78	0	100	126.78	12678
Totals	1516		122692.41	1584		135782
	CG=	80.9316689		**CG=**	85.72096591	

	solo weight	arm	moment	duel weight	arm	moment
Aircraft	1094	78.5747806	85960.81	1094	78.57478062	85961
pilot	211	97.48	20568.28	210	97.48	20471
Pax	0	97.48	0	210	97.48	20471
Oil	0	0	0	0	0	0
Fuel @ 6#	252	80	20160	252	80	20160
Baggage	5	126.78	633.9	100	126.78	12678
Totals	1562		127322.99	1866		159740
	CG=	81.5127977		**CG=**	85.60579314	

Form Approved
OMB NO. 2120-0018

US Department of Transportation
Federal Aviation Administration

ELIGIBILITY STATEMENT
AMATEUR-BUILT AIRCRAFT

Instructions: Print or type all information except signature.
Submit original to an authorized FAA representative.
Applicant completes Section I thru III.
Notary Public Completes Section IV.

I. REGISTERED OWNER INFORMATION

Name(s) Richard E. GRIFF

Address(es) 2354E 2900N (No. & Street) TWIN FALLS (City) ID (State) 83301 (Zip)

Telephone No.(s) 208-734-6499 (Residence) 208-733-4077 (Business)

II. AIRCRAFT INFORMATION

Model RV-7A

Assigned Serial No. 70837

Registration No. N313P

Aircraft Fabricated: Plan ☐ Kit ☐

Engine(s) Make Teledyne Mattituck TMX

Engine(s) Serial No. 43-7

Prop./Rotor(s) Make Hartzell

Prop./Rotor(s) Serial No.(s) K13923

III. MAJOR PORTION ELIGIBILITY STATEMENT OF APPLICANT

I certify the aircraft identified in Section II above was fabricate and assembled by Richard E GRIFF
Name of Person(s)(Please Print)
for my (their) education or recreation. I (we) have records to support this statement and will make them available to the FAA upon request.

-NOTICE-

Whoever in any matter within the jurisdiction of any department or agency of the United States knowingly and willfully falsifies, conceals or covers up by any trick, scheme, or device a material fact, or who makes any false, fictitious or fraudulent statements or representations, or makes or uses any false writing or document knowing the same to contain any false, fictitious or fraudulent statement or entry, shall be fined not more than $10,000 or imprisoned not more than 5 years, or both (U.S. Code, Title 18, Sec. 1001.)

APPLICANT'S DECLARATION

I hereby certify that all statements and answers provided by me in this statement form are complete and true to the best of my knowledge, and I agree that they are to be considered part or the basis for issuance of any FAA certificate to me. I have also read and understand the Privacy Act statement that accompanies this form.

SEAL

Signature of Applicant (In Ink) Richard E Griff — Date 10-17-06

IV. NOTARIZATION STATEMENT

DATED 10-17-06
STATE OF Montana
COUNTY OF Fergus
ON THIS 17th DAY OF Oct., IN THE YEAR TWO THOUSAND AND SIX,
BEFORE ME Kam Dahl PERSONALLY
APPEARED, KNOWN TO ME TO BE THE PERSON WHOSE NAME IS SUBSCRIBED TO THE WITHIN INSTRUMENT, AND ACKNOWLEDGED THAT HE/SHE EXECUTED THE SAME

NOTARY SIGNATURE: ~~KAM DAHL~~
MY COMMISSION EXPIRES: 4/15/2009
RESIDING IN: Lewistown

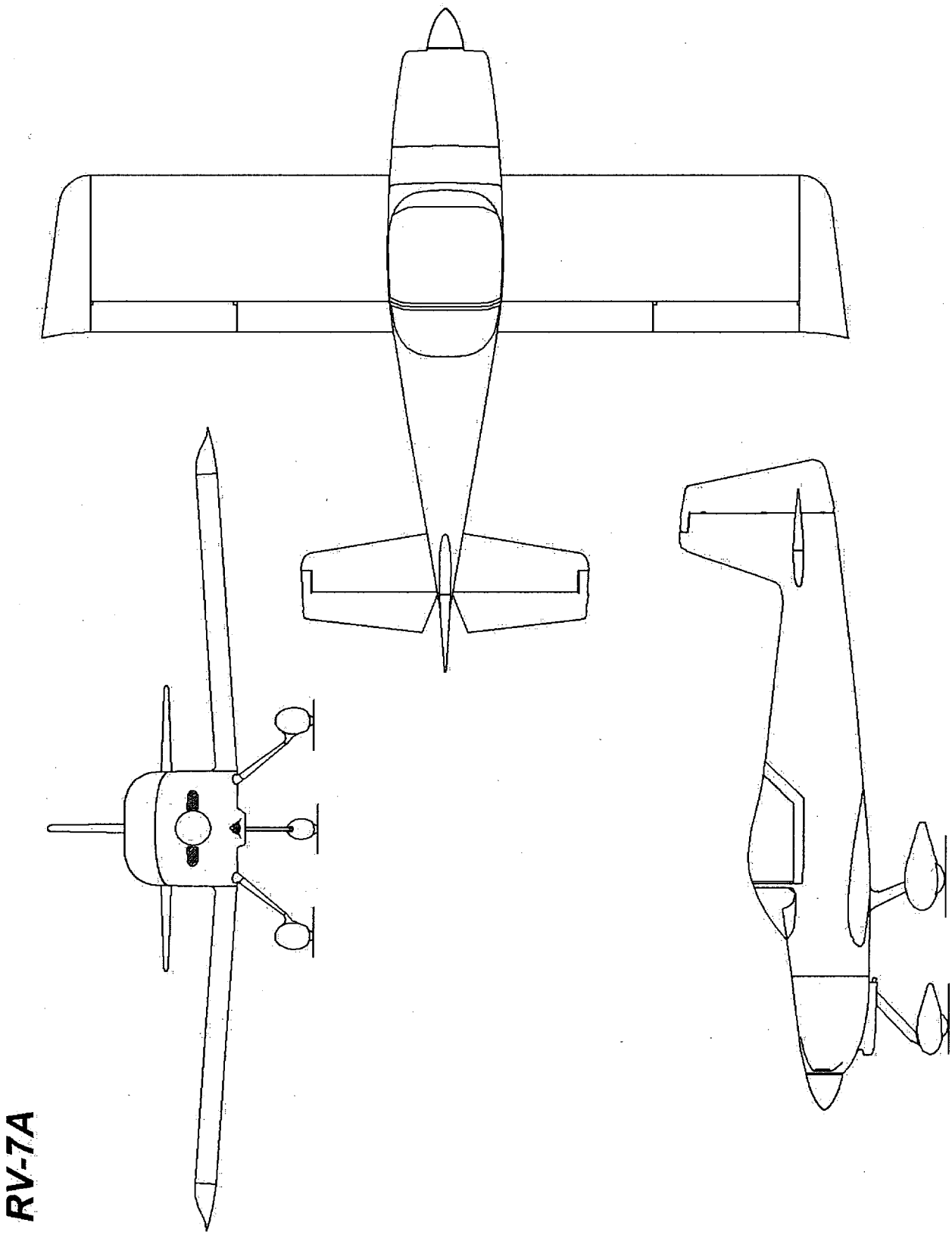
RV-7A

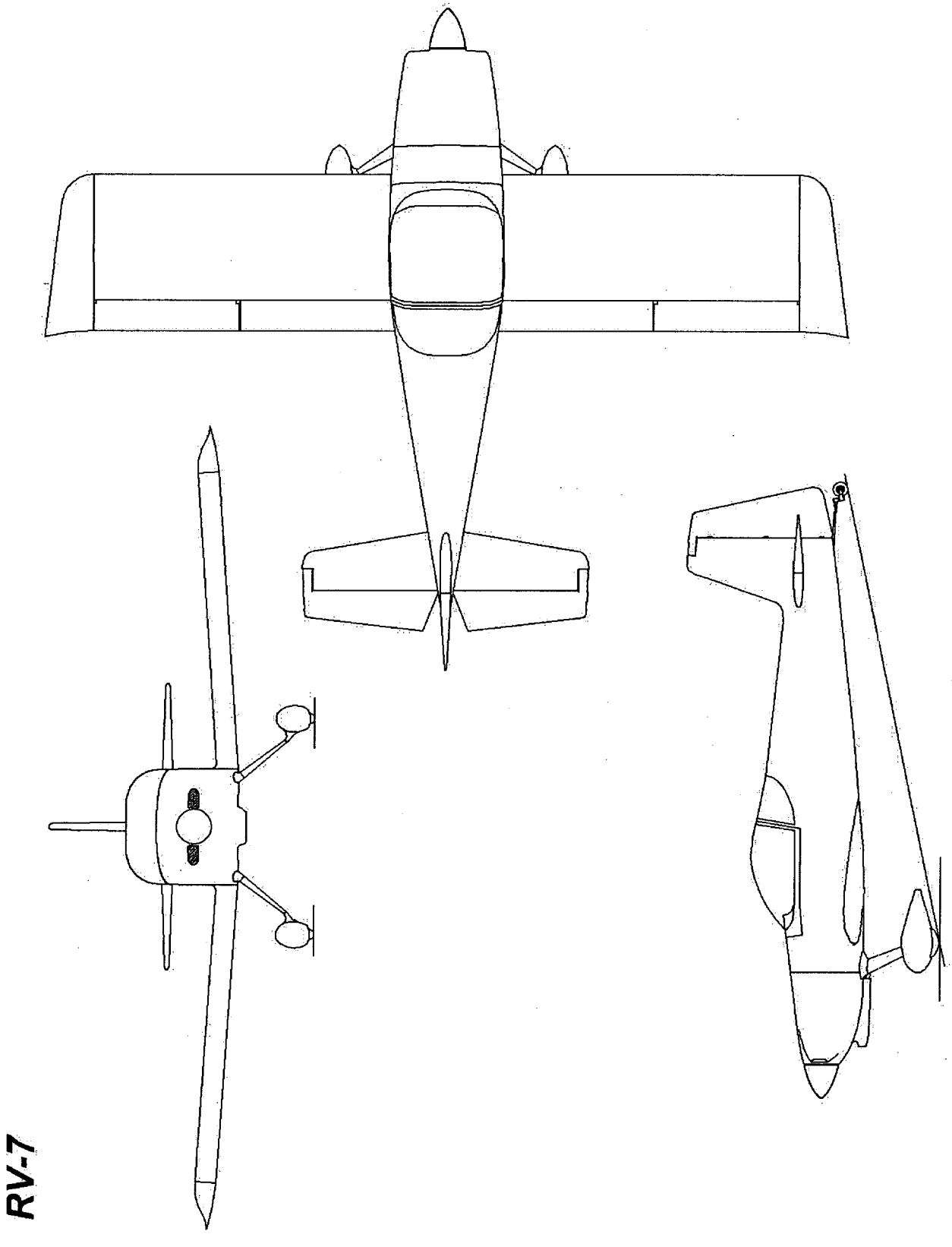

RV-7

Notes

I built this airplane in accordance with VANS BLUE prints and instructions. Builder Rudolf Graff 10-18-06

I certify that this aircraft has been inspected on 10-18-06 in accordance with the scope and detail of Appendix D to Part 43 and was found to be in a condition for safe operation.

Operational Check the engine and found no leaks. Power Check Good Rudolf Graff

the installed Transponder & automatic pressure altitude reporting equipment will not be used until Tested in accordance with 91.413(a & b)(c).

Rudolf Graff

I have inspected this aircraft and found it complies with the requirments of FAR 21.191(g) EXPERIMENTAL Certificate of Airworthiness Dated 10/18/06 was issued

DART 930719 NM